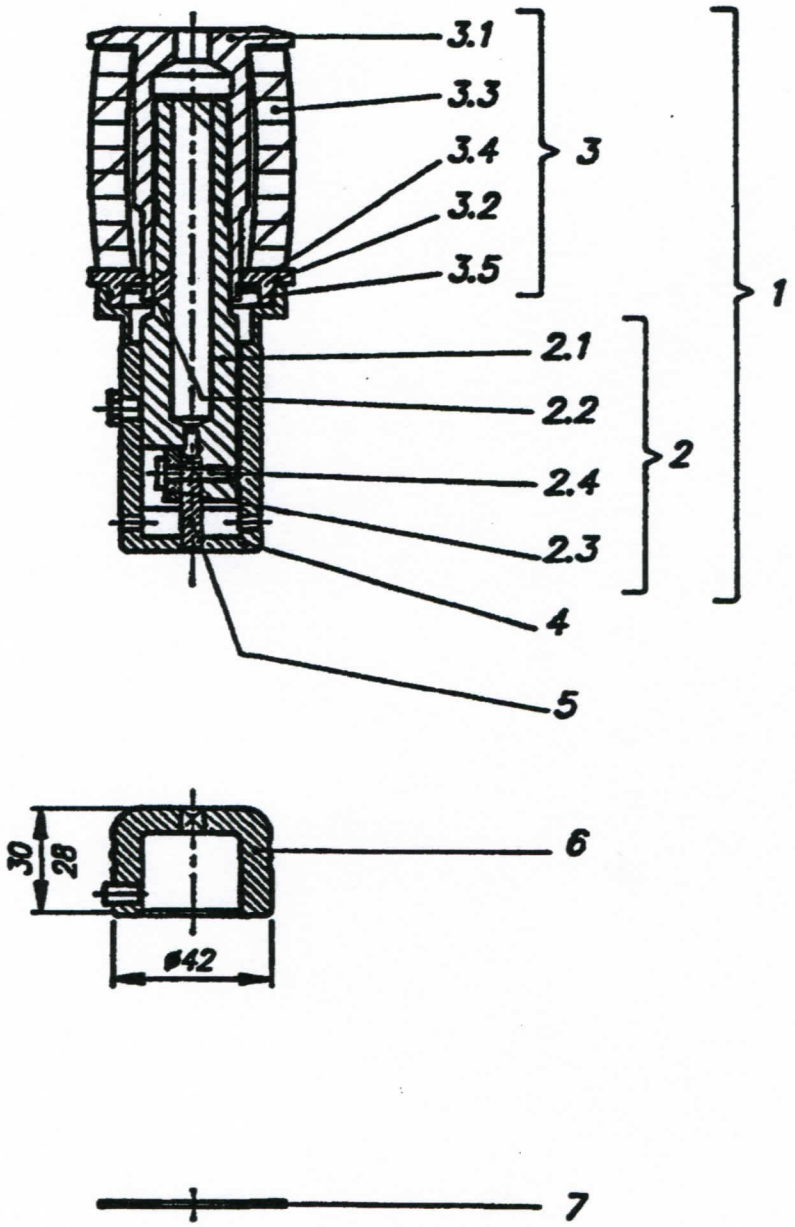


**25 OLP**

| Pos. | Désignation | N° Article | Nbre | Poids |
|---|---|---|---|---|
| 1 | ENS. POINCON HSS 25 OLP FORME | **007.509.9xx** | 1 | 1,000 |
| 1.c | ENS. POINCON HSS 25 OLP FORME croquis | **007.509.911** | 1 | 1,000 |
| | | | | |
| | | | | |
| 2 | ENS. PORTE-POINCON 25 OLP | **326.344.0** | 1 | 0,250 |
| 2.1 | PORTE-POINCON 25 OLP | **326.333.0** | 1 | 0,240 |
| 2.2 | O-RING DE PRECISION | **518.213.0** | 1 | 0,010 |
| 2.3 | PLAQUETTE FIXATION 25 OLP | **344.034.0** | 1 | 0,020 |
| 2.4 | VIS A TETE BASSE | **804.014.1** | 2 | 0,010 |
| | | | | |
| 3 | DEVETISSEUR 25 OCP | **008.265.0** | 1 | 0,450 |
| 3.1 | ASSIETTE SUP. 25 OCP | **300.259.0** | 1 | 0,270 |
| 3.2 | ASSIETTE INF. 25 OCP | **340.052.0** | 1 | 0,080 |
| 3.3 | RESSORT 25 OCP | **206.053.0** | 1 | 0,110 |
| 3.4 | CIRCLIPS | **857.102.1** | 1 | 0,010 |
| 3.5 | JOINT O-RING DE PRECISION | **518.170.0** | 1 | 0,010 |
| | | | | |
| 4 | FOURREAU 25 OCP FORME | **102.507.9xx** | 1 | 0,290 |
| 4.c | FOURREAU 25 OCP FORME croquis | **102.507.911** | 1 | 0,290 |
| 5 | POINCON HSS 25 OLP | **104.509.9xx** | 1 | 0,020 |
| 5.c | POINCON HSS 25 OLP croquis | **104.509.911** | 1 | 0,020 |
| 6 | MATRICE 25 OCP FORME | **100.345.9xx** | 1 | 0,200 |
| 6.c | MATRICE 25 OCP FORME croquis | **100.345.911** | 1 | 0,200 |
| 6 | MATRICE 25 OCP FORME renforcée | **100.347.9xx** | 1 | 0,230 |
| 6.c | MATRICE 25 OCP FORME renforcée croquis | **100.347.911** | 1 | 0,230 |
| 7 | RONDELLE AFFUTAGE MATRICE 25 | **893.321.9** | 1 | 0,010 |